US009180357B2

(12) **United States Patent**
Richley

(10) **Patent No.: US 9,180,357 B2**
(45) **Date of Patent: Nov. 10, 2015**

(54) **MULTIPLE ANTENNA INTERFERENCE REJECTION IN ULTRA-WIDEBAND REAL TIME LOCATING SYSTEMS**

(71) Applicant: **ZIH Corp.**, Lincolnshire, IL (US)

(72) Inventor: **Edward A. Richley**, Gaithersburg, MD (US)

(73) Assignee: **ZIH Corp.**, Lincolnshire, IL (US)

(*) Notice: Subject to any disclaimer, the term of this patent is extended or adjusted under 35 U.S.C. 154(b) by 63 days.

(21) Appl. No.: **13/942,202**

(22) Filed: **Jul. 15, 2013**

(65) **Prior Publication Data**

US 2014/0362892 A1 Dec. 11, 2014

Related U.S. Application Data

(60) Provisional application No. 61/831,990, filed on Jun. 6, 2013.

(51) **Int. Cl.**
H04B 1/00 (2006.01)
A63B 71/06 (2006.01)
(Continued)

(52) **U.S. Cl.**
CPC ***A63B 71/0619*** (2013.01); ***A63B 24/0062*** (2013.01); ***A63B 71/06*** (2013.01); ***A63B 71/0622*** (2013.01); ***G06F 19/3437*** (2013.01); ***G06K 7/10227*** (2013.01);
(Continued)

(58) **Field of Classification Search**
CPC H04B 1/7097
USPC 375/130
See application file for complete search history.

(56) **References Cited**

U.S. PATENT DOCUMENTS

5,046,133 A * 9/1991 Watanabe et al. 455/138
5,901,172 A 5/1999 Fontana et al.
(Continued)

FOREIGN PATENT DOCUMENTS

WO WO-9805977 A1 2/1998
WO WO 2014197600 12/2014

OTHER PUBLICATIONS

International Search Report and Written Opinion from International Application No. PCT/US2014/041062 dated Oct. 1, 2014.
(Continued)

Primary Examiner — Lihong Yu
(74) *Attorney, Agent, or Firm* — Alston & Bird LLP

(57) **ABSTRACT**

Systems, methods, apparatuses, and computer readable media are disclosed for providing interference rejection in ultra-wideband real time locating systems. In one embodiment, an ultra-wideband (UWB) receiver is configured to: receive an interference signal from a source positioned outside a monitored region; receive a composite signal transmitted from a tagged object moving about a playing field within the monitored region, wherein the composite signal comprises a location signal and a component of the interference signal; detect whether the component of the interference signal exceeds a threshold value; and adjust, via a processor, filtering of the composite signal to attenuate the component of the interference signal based on whether the component of the interference signal exceeds the threshold value. Some embodiments provide for filtering of the composite signal using a combiner while others employ a tunable notch filter. Corresponding systems, methods, and computer-readable storage medium are also provided.

16 Claims, 8 Drawing Sheets

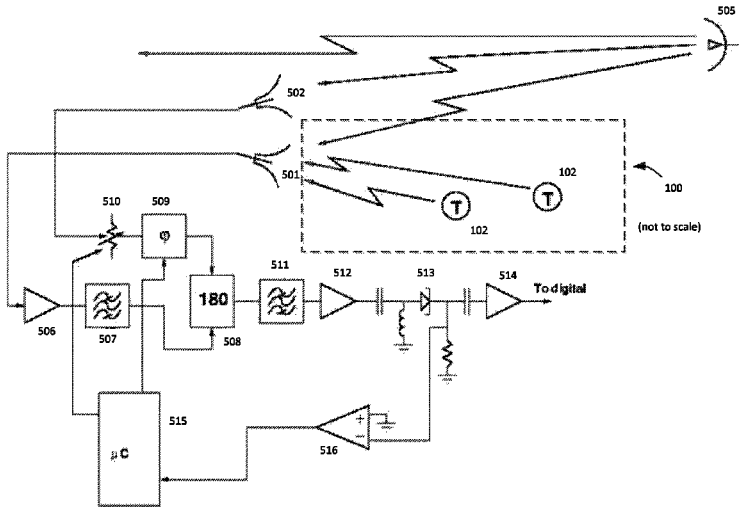

(51) **Int. Cl.**

A63B 24/00	(2006.01)
G06K 7/10	(2006.01)
G08C 17/02	(2006.01)
H04B 1/7097	(2011.01)
H04B 1/10	(2006.01)
H04W 4/02	(2009.01)
G06K 9/00	(2006.01)
G06F 19/00	(2011.01)
G06N 5/02	(2006.01)
H04L 12/26	(2006.01)
G06Q 50/20	(2012.01)
G09B 19/00	(2006.01)
H04B 1/7163	(2011.01)
G06Q 90/00	(2006.01)

(52) **U.S. Cl.**

CPC ***G06K 7/10306*** (2013.01); ***G06K 7/10366*** (2013.01); ***G06K 9/00342*** (2013.01); ***G06N 5/02*** (2013.01); ***G06Q 50/20*** (2013.01); ***G08C 17/02*** (2013.01); ***G09B 19/0038*** (2013.01); ***H04B 1/1036*** (2013.01); ***H04B 1/7097*** (2013.01); ***H04B 1/71635*** (2013.01); ***H04B 1/71637*** (2013.01); ***H04L 43/04*** (2013.01); ***H04W 4/02*** (2013.01); *G06Q 90/00* (2013.01)

(56) **References Cited**

U.S. PATENT DOCUMENTS

5,920,287	A	7/1999	Belcher et al.	
5,995,046	A	11/1999	Belcher et al.	
6,121,926	A	9/2000	Belcher et al.	
6,882,315	B2	10/2001	Richley et al.	
6,366,242	B1	4/2002	Boyd et al.	
6,380,894	B1	4/2002	Boyd et al.	
6,593,885	B2	7/2003	Wisherd et al.	
6,655,582	B2	10/2003	Wohl et al.	
6,812,884	B2	11/2004	Richley et al.	
7,190,271	B2	3/2007	Boyd et al.	
7,263,133	B1 *	8/2007	Miao	375/267
7,667,604	B2	2/2010	Ebert et al.	
7,710,322	B1	5/2010	Ameti et al.	
7,755,541	B2	7/2010	Wisherd et al.	
8,009,727	B2 *	8/2011	Hui et al.	375/230
8,023,917	B2	9/2011	Popescu	
8,568,278	B2	10/2013	Riley et al.	
8,665,152	B1 *	3/2014	Kling et al.	342/357.76
8,705,671	B2	4/2014	Ameti et al.	
8,775,916	B2	7/2014	Pulsipher et al.	
8,780,204	B2	10/2014	DeAngelis et al.	
9,081,076	B2	7/2015	DeAngelis et al.	
2003/0128100	A1	7/2003	Burkhardt et al.	
2003/0163287	A1	8/2003	Vock et al.	
2003/0227453	A1	12/2003	Beier et al.	
2006/0164213	A1	7/2006	Burghard et al.	
2006/0281061	A1	12/2006	Hightower et al.	
2007/0091292	A1	4/2007	Cho et al.	
2007/0176749	A1	8/2007	Boyd et al.	
2007/0296723	A1	12/2007	Williams	
2008/0129825	A1	6/2008	DeAngelis et al.	
2008/0266131	A1	10/2008	Richardson et al.	
2008/0281443	A1	11/2008	Rodgers	
2009/0231198	A1	9/2009	Walsh et al.	
2010/0250305	A1	9/2010	Lee et al.	
2010/0283630	A1	11/2010	Alonso	
2011/0064023	A1 *	3/2011	Yamamoto et al.	370/328
2012/0014278	A1	1/2012	Ameti et al.	
2012/0081531	A1	4/2012	DeAngelis et al.	
2012/0126973	A1	5/2012	DeAngelis et al.	
2012/0218301	A1	8/2012	Miller	
2012/0225676	A1	9/2012	Boyd et al.	
2012/0231739	A1 *	9/2012	Chen et al.	455/41.2
2012/0246795	A1	10/2012	Scheffler et al.	
2012/0256745	A1	10/2012	Plett et al.	
2012/0268239	A1	10/2012	Ljung et al.	
2013/0021206	A1	1/2013	Hach et al.	
2013/0041590	A1	2/2013	Burich et al.	
2013/0066448	A1	3/2013	Alonso	
2013/0115904	A1	5/2013	Kapoor et al.	
2014/0156036	A1	6/2014	Huang	
2014/0170607	A1	6/2014	Hsiao et al.	
2014/0320660	A1	10/2014	DeAngelis et al.	

OTHER PUBLICATIONS

International Search Report and Written Opinion from International Application No. PCT/US2014/040947 dated Oct. 9, 2014.

Fontana, R.J., Richley, E., Barney, J., "Commercialization of an Ultra Wideband Precision Asset Location System," *2003 IEEE Conference on Ultra Wideband Systems and Technologies*, Nov. 16-19, 2003.

Gueziec, A., "Tracking Pitches for Broadcast Television," *Computer*, Aug. 7, 2002.

CattleLog Pro, *eMerge Interactive, Inc.*, Sebastian, FL, 2004.

Marchant, J., Secure Animal Identification and Source Verification, *JM Communications*, UK, 2002.

"A Guide to Using NLIS Approved Ear Tags and Rumen Boluses," National Livestock Identification Scheme, *Meat & Livestock Australia Limited*, North Sydney, Australia, May 2003.

King, L., "NAIS Cattle ID Pilot Projects Not Needed, Since Proven Advanced Technology Already Exists," *ScoringSystem, Inc.*, Sarasota, FL, Dec. 27, 2005. (www.prweb.com/releases/2005/12prweb325888.htm).

"RFID in the Australian Meat and Livestock Industry," Allflex Australia Pty Ltd,Capalaba, QLD (AU), *Data Capture Suppliers Guide*, 2003-2004.

International Search Report and Written Opinion from International Application No. PCT/US2014/040940 dated Dec. 17, 2014.

International Search Report and Written Opinion from International Application No. PCT/US2014/040881 dated Nov. 4, 2014.

Complaint before the United States District Court of Massachusetts, Civil Action No. 1:15-cv-12297, *Lynx Systems Developers, Inc. et al.* v. *Zebra Enterprise Solutions Corporation et al.*, filed Jun. 10, 2015.

* cited by examiner

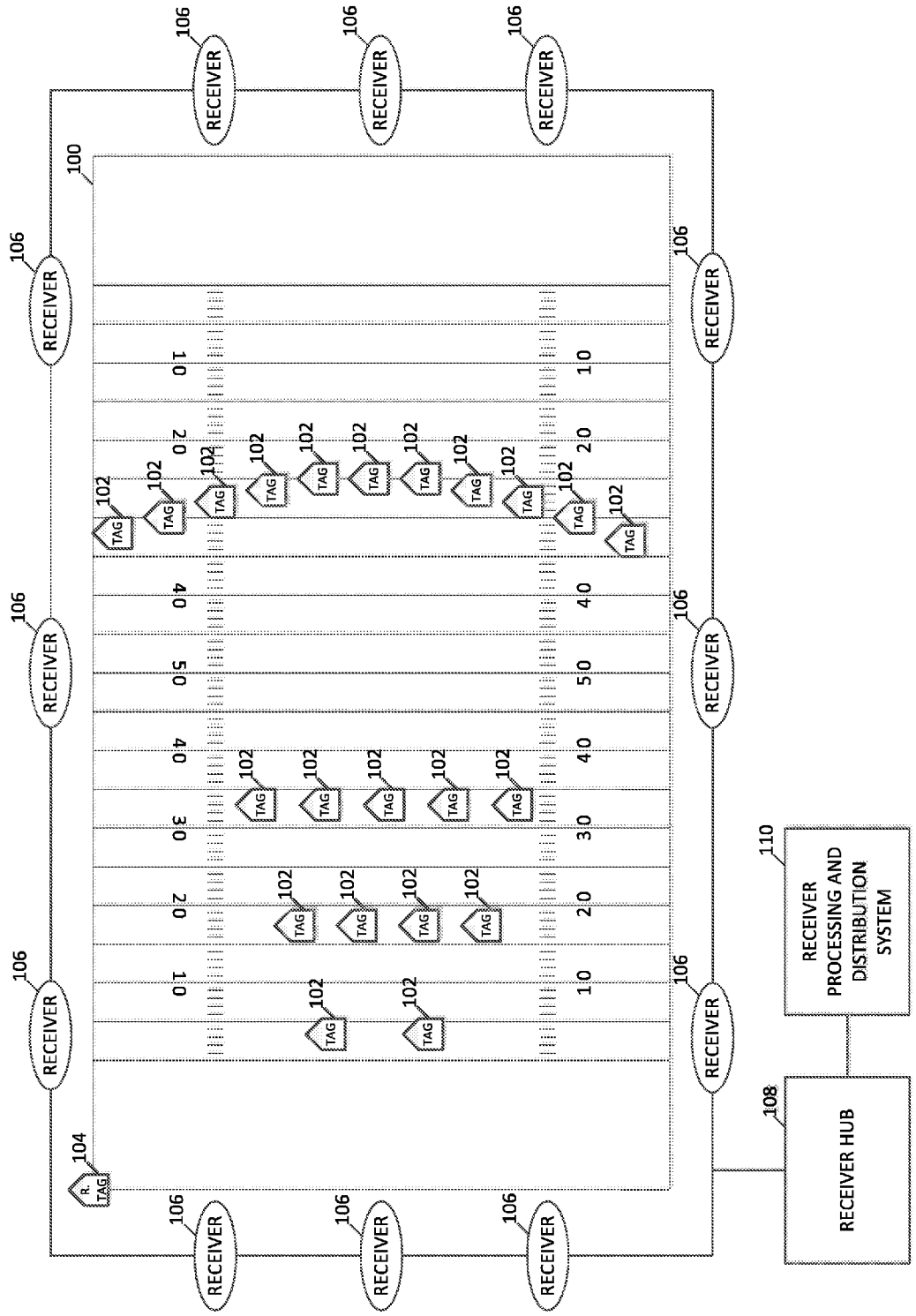
RECEIVER
TAG
R TAG
RECEIVER HUB
RECEIVER PROCESSING AND DISTRIBUTION SYSTEM
100
102
104
106
108
110

Figure 1A

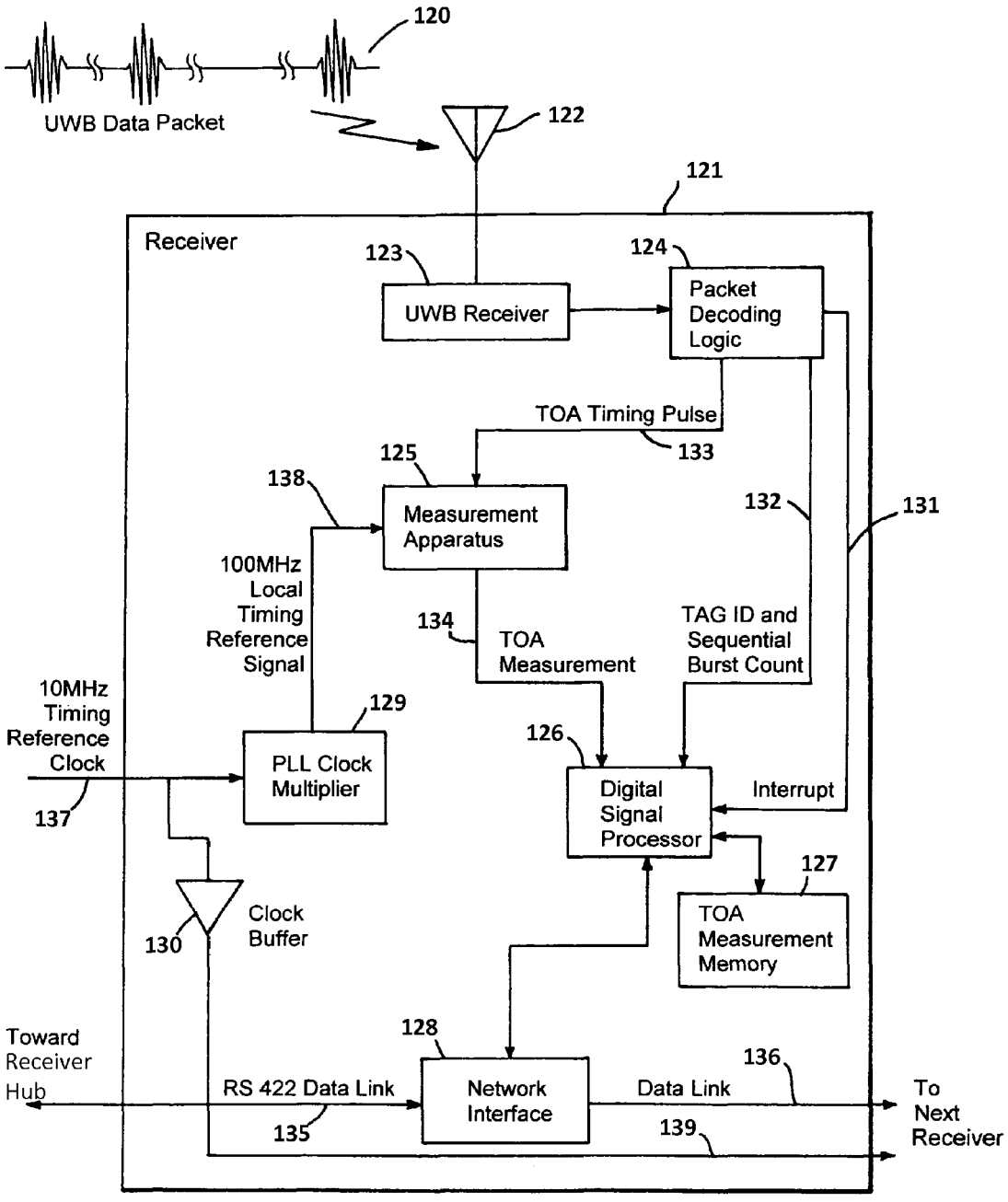
120
UWB Data Packet
122
121
Receiver
123
124
UWB Receiver
Packet Decoding Logic
TOA Timing Pulse
133
125
138
Measurement Apparatus
132
131
100MHz Local Timing Reference Signal
134
TOA Measurement
TAG ID and Sequential Burst Count
10MHz Timing Reference Clock
137
129
PLL Clock Multiplier
126
Digital Signal Processor
Interrupt
127
TOA Measurement Memory
Clock Buffer
130
Toward Receiver Hub
128
136
RS 422 Data Link
Network Interface
Data Link
To Next Receiver
135
139

Figure 1B

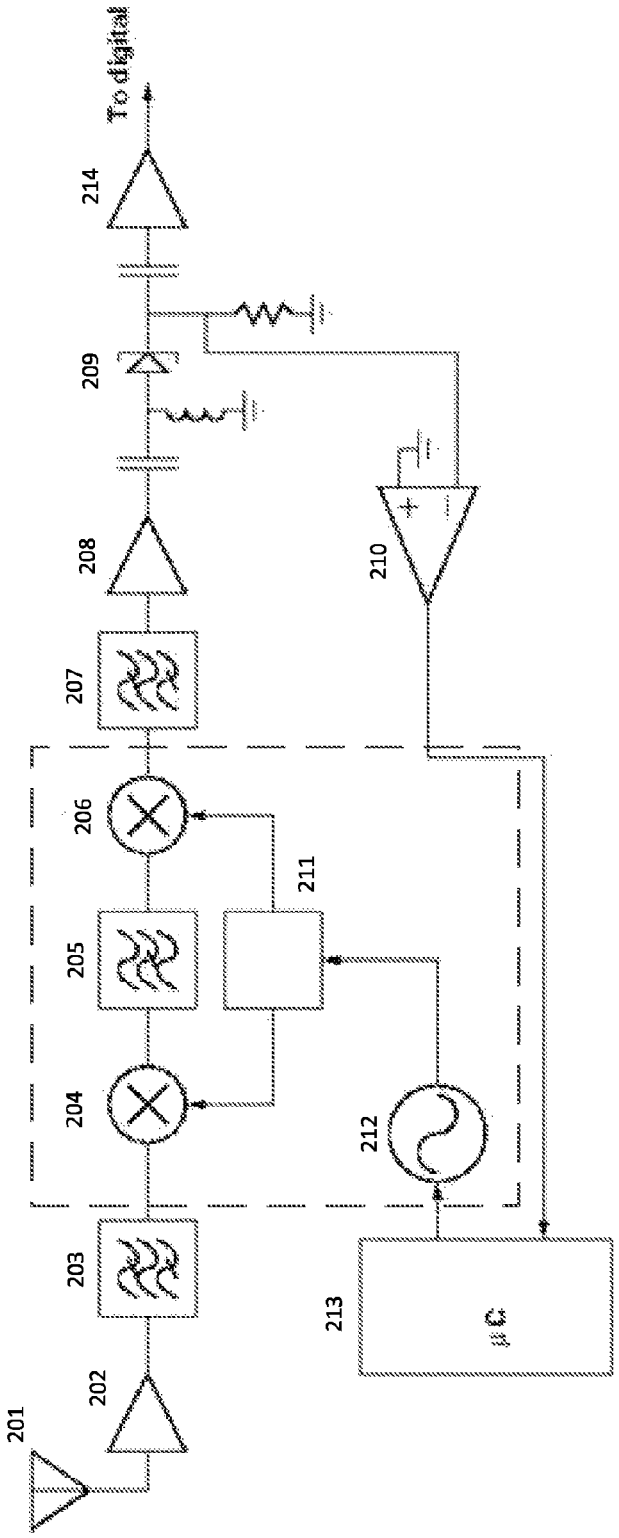
To digital
214
209
208
210
207
206
211
205
204
212
203
213
μC
202
201

Figure 2

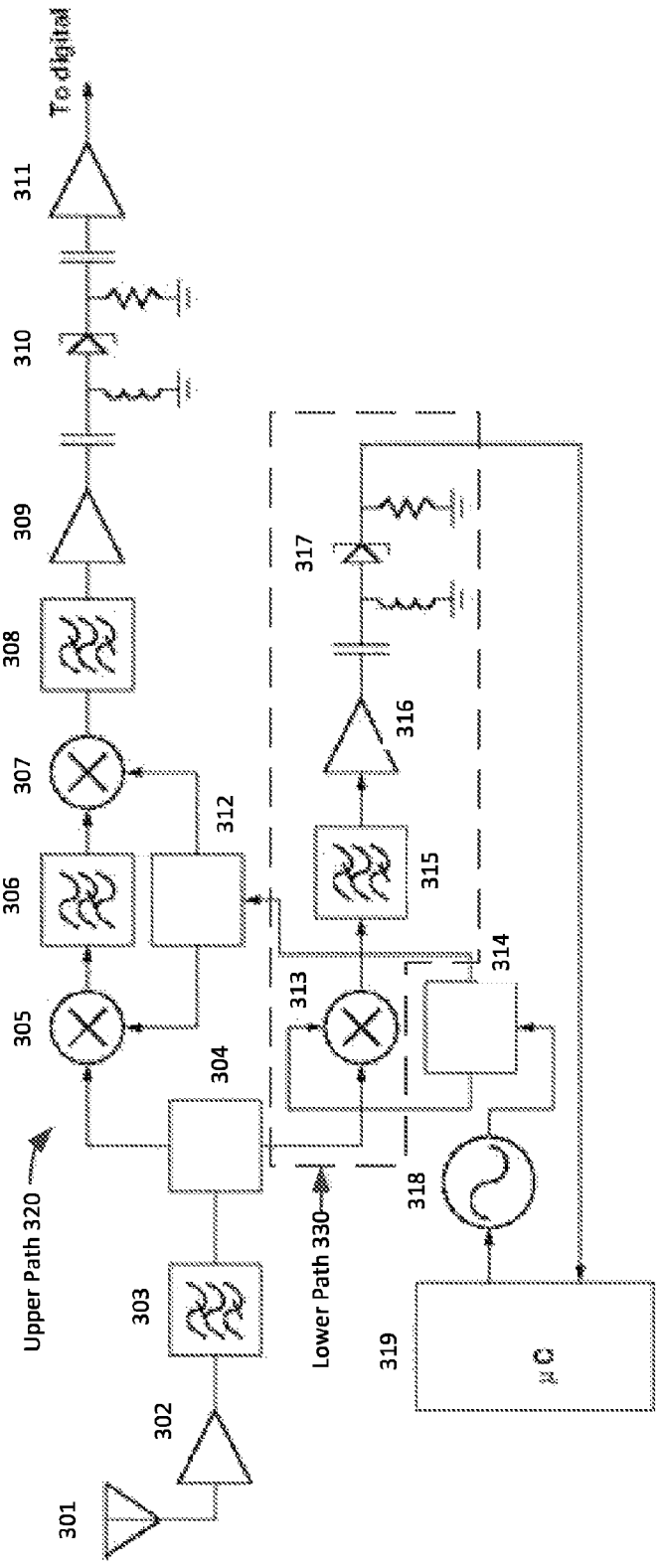
To digital
311
310
309
308
307
306
305
304
303
302
301
312
313
314
315
316
317
318
319
μC
Upper Path 320
Lower Path 330

Figure 3

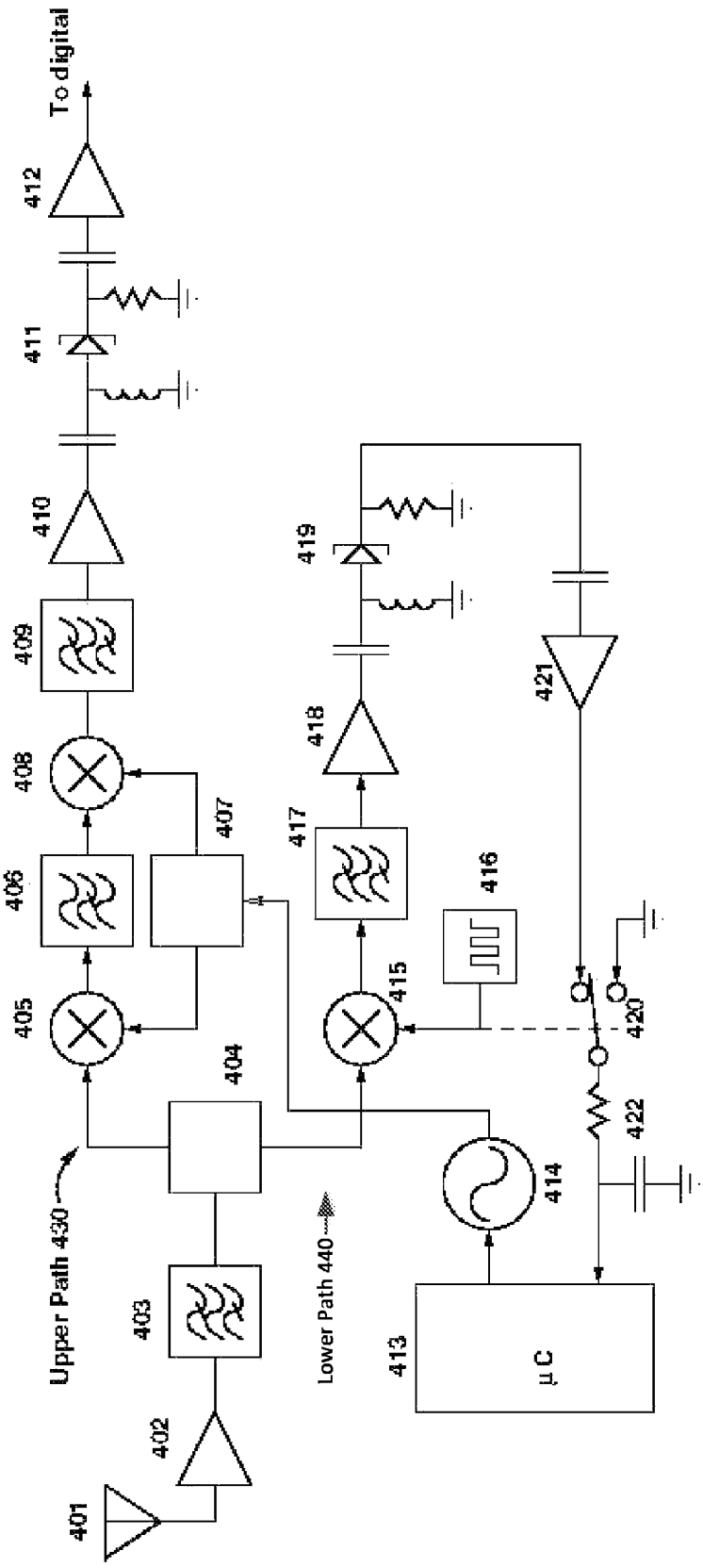
To digital
412
411
410
409
408
407
406
405
404
403
402
401
417
418
419
421
416
415
420
422
414
413
μC
Upper Path 430
Lower Path 440

Figure 4

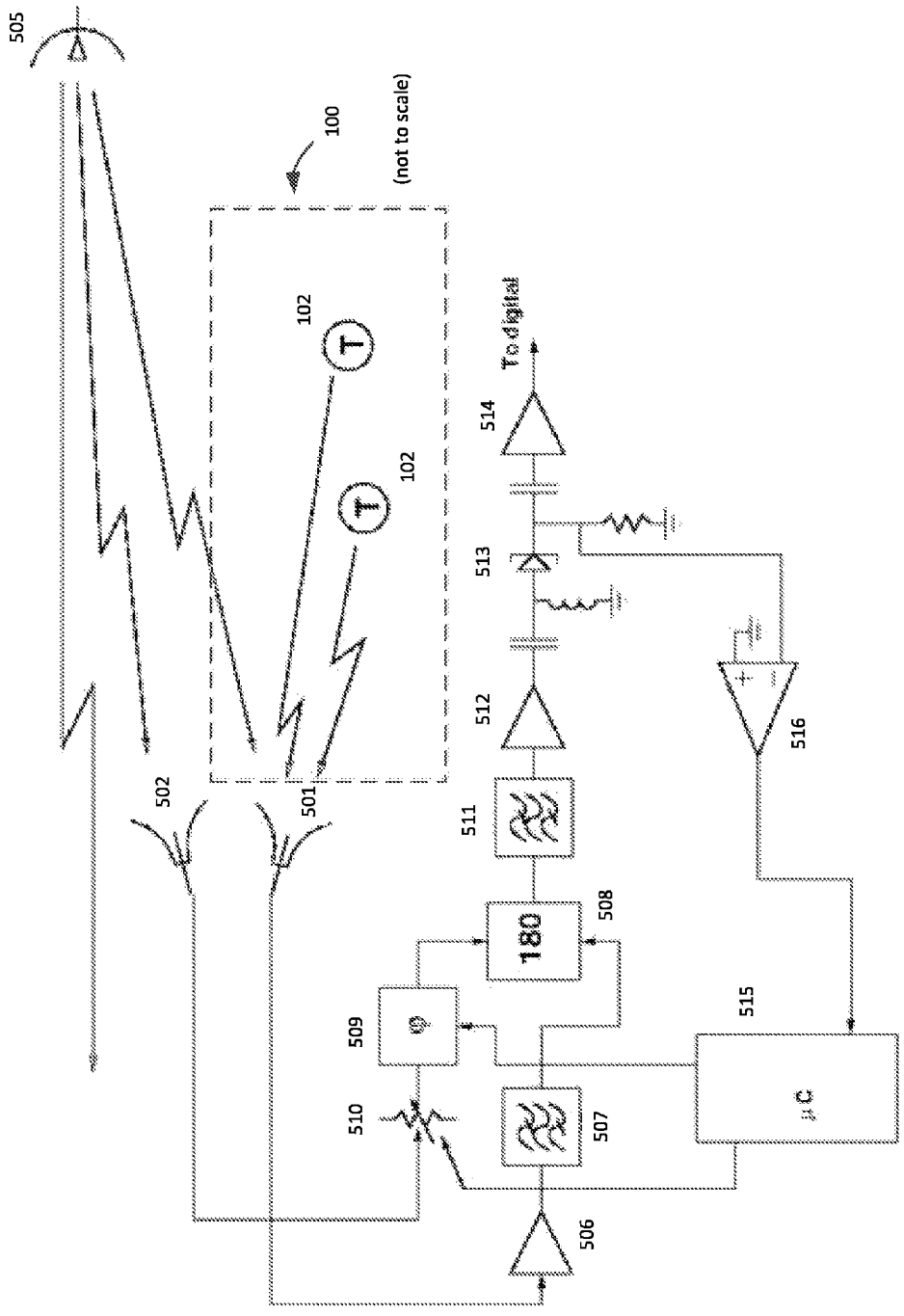
505
100
(not to scale)
102
102
T
T
To digital
514
513
512
511
516
502
501
508
180
509
φ
510
507
515
μC
506

Figure 5

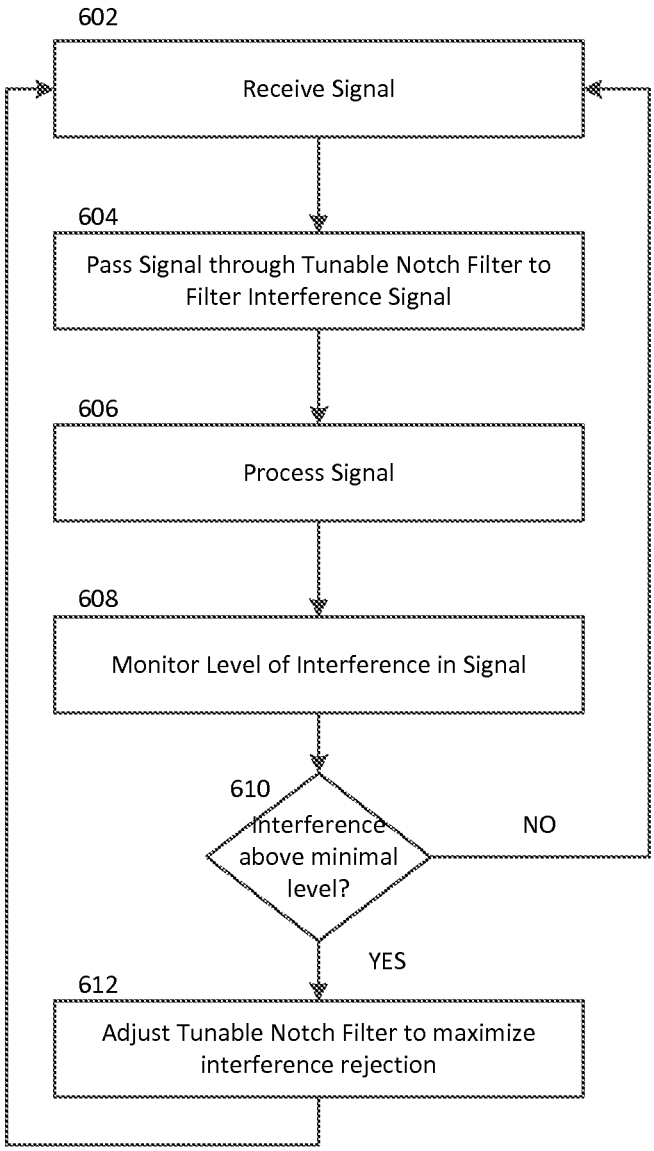
602
Receive Signal
604
Pass Signal through Tunable Notch Filter to Filter Interference Signal
606
Process Signal
608
Monitor Level of Interference in Signal
610
Interference above minimal level?
NO
YES
612
Adjust Tunable Notch Filter to maximize interference rejection

Figure 6

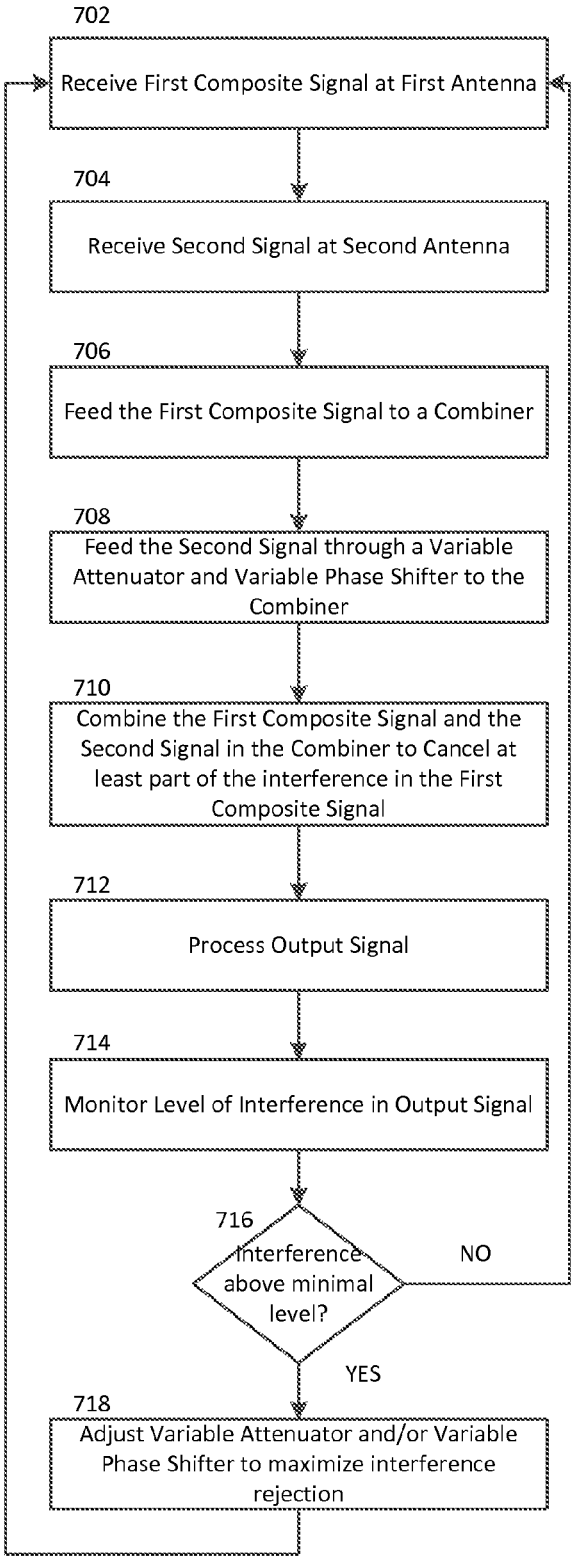
702
Receive First Composite Signal at First Antenna
704
Receive Second Signal at Second Antenna
706
Feed the First Composite Signal to a Combiner
708
Feed the Second Signal through a Variable Attenuator and Variable Phase Shifter to the Combiner
710
Combine the First Composite Signal and the Second Signal in the Combiner to Cancel at least part of the interference in the First Composite Signal
712
Process Output Signal
714
Monitor Level of Interference in Output Signal
716
Interference above minimal level?
NO
YES
718
Adjust Variable Attenuator and/or Variable Phase Shifter to maximize interference rejection

Figure 7

MULTIPLE ANTENNA INTERFERENCE REJECTION IN ULTRA-WIDEBAND REAL TIME LOCATING SYSTEMS

CROSS-REFERENCE TO RELATED APPLICATION

This application claims priority from and the benefit of the filing date of U.S. Provisional Patent Application No. 61/831,990 filed Jun. 6, 2013, the contents of which is incorporated by reference in its entirety herein.

FIELD

Embodiments discussed herein are related to radio frequency locating and, more particularly, to systems, methods, apparatuses, computer readable media and other means for providing interference rejection.

BACKGROUND

A number of deficiencies and problems associated with UWB Real Time Locating Systems particularly related to interference are identified herein. Through applied effort, ingenuity, and innovation, exemplary solutions to many of these identified problems are embodied by the present invention, which is described in detail below.

BRIEF SUMMARY

Systems, methods, apparatuses, and computer readable media are disclosed for providing interference rejection in Ultra-Wideband Real Time Locating Systems.

Embodiments of the present invention may provide for interference rejection in Ultra-Wideband (UWB) Real Time Locating Systems (RTLS). Embodiments may provide for mitigation of the interference caused by other nearby telecommunications systems or equipment by taking advantage of aspects of the ultra-wideband signal relative to a typical interference signal.

In one embodiment, a UWB receiver is provided comprising a first antenna configured to receive a first signal, the first signal comprising a UWB signal and a first component of an interference signal; and a second antenna configured to receive a second signal, the second signal comprising at least a second component of the interference signal. The UWB receiver further comprises a combiner configured to receive the first signal from the first antenna; receive the second signal from the second antenna; and combine the first signal and the second signal to generate an output signal providing cancellation of at least part of the first component of the inference signal based at least in part on the second component of the interference signal.

In some embodiments, the UWB receiver may further comprise a controller; a detector; a variable attenuator; and a variable phase shifter. The detector may be configured to receive the output signal of the combiner and indicate an interference level in the output signal. The controller may be configured to monitor the interference level at the detector and adjust at least one of the variable attenuator and the variable phase shifter in an instance in which the monitored interference level is above a threshold level. The variable attenuator and the variable phase shifter may be configured to modify the second signal received from the second antenna and provide the modified second signal to the combiner.

In some embodiments, the UWB receiver may be configured such that the first antenna may be positioned in a first direction to receive signals transmitted from a monitored region and the second antenna may be positioned in a second direction, different from the first direction, to receive signals transmitted from outside the monitored region. In some embodiments, an interference signal may be generated by one or more communications systems positioned outside of a monitored region.

In another embodiment, a UWB receiver is provided comprising an antenna configured to receive a composite signal, the composite signal comprising a UWB signal and an interference signal. The UWB receiver further comprises a tunable notch filter configured to attenuate a part of the composite signal representing the interference signal thereby generating a filtered signal. The UWB receiver further comprises a detector configured to receive the filtered signal from the tunable notch filter and indicate an interference level in the filtered signal. The UWB receiver further comprises a controller and a voltage controlled oscillator; the controller configured to monitor the interference level at the detector and adjust the frequency of the voltage controlled oscillator in an instance in which the monitored interference level is above a threshold level; and the voltage controlled oscillator configured to tune the tunable notch filter.

In some embodiments, the tunable notch filter may comprise a first mixer, a notch filter, a second mixer, a splitter, and a voltage controlled oscillator. The first mixer may be configured to perform a downconversion of the received composite signal. The notch filter may be configured to attenuate part of the composite signal representing the interference signal. The second mixer may be configured to upconvert a notched signal back to the desired band. The splitter may be configured to provide the output of the voltage controlled oscillator to the first mixer and the second mixer. The voltage controlled oscillator may be configured to provide a frequency to the splitter that adjusts interference filtering of the tunable notch filter.

In still another embodiment, a method for providing interference rejection may include receiving a composite signal, the composite signal comprising an ultra-wideband (UWB) signal transmitted from within a monitored region and an interference signal transmitted from a source positioned outside the monitored region. The method further includes filtering some amount of the composite signal with a tunable notch filter, to provide rejection of at least part of the interference signal, to generate a filtered signal. The method further includes monitoring the filtered signal, determining an amount of interference in the filtered signal, and adjusting the tunable notch filter to increase the interference filtering in an instance in which the amount of interference is above a threshold level. The method further includes processing the filtered signal.

In some embodiments, the signal may be received by a UWB receiver.

In another embodiment, a method for providing interference rejection includes receiving a first signal at a first antenna, wherein the first signal is a composite signal comprising a UWB signal and a first component of an interference signal; and receiving a second signal at a second antenna, wherein the second signal comprises at least a second component of the interference signal. The method further includes combining the first signal and the second signal to reduce the effect of the interference signal, and processing the combined signal.

In some embodiments, the combined signal may be provided by a combiner. In some embodiments, the method may further include monitoring the filtered signal; determining an amount of interference in the filtered signal; and if the amount

of interference is above a threshold level, adjusting the second signal inputs to the combiner to increase filtering of the interference signal.

In some embodiments, the interference signal may be generated by one or more communications systems positioned outside of a monitored region. In some embodiments, the first antenna may be positioned in a first direction to receive signals transmitted from a monitored region and the second antenna may be positioned in a second direction, different from the first direction, to receive signals transmitted from outside the monitored region.

BRIEF DESCRIPTION OF THE SEVERAL VIEWS OF THE DRAWING(S)

Having thus described the invention in general terms, reference will now be made to the accompanying drawings, which are not necessarily drawn to scale, and wherein:

FIG. **1**A illustrates an exemplary environment using a radio frequency locating system for providing performance analytics in accordance with some embodiments of the present invention;

FIG. **1**B illustrates an exemplary receiver in a UWB system comprising a UWB receiver that may be configured in accordance with some embodiments of the present invention;

FIG. **2** illustrates a block diagram of an exemplary UWB receiver in accordance with some embodiments of the present invention;

FIG. **3** illustrates a block diagram of another exemplary UWB receiver in accordance with some embodiments of the present invention;

FIG. **4** illustrates a block diagram of another exemplary UWB receiver in accordance with some embodiments of the present invention;

FIG. **5** illustrates a block diagram of another exemplary UWB receiver in accordance with some embodiments of the present invention;

FIG. **6** illustrates a flowchart of an example process that may be used in providing interference rejection in accordance with some embodiments of the present invention; and

FIG. **7** illustrates a flowchart of an example process that may be used in providing interference rejection in accordance with some embodiments of the present invention.

DETAILED DESCRIPTION

The present invention now will be described more fully hereinafter with reference to the accompanying drawings, in which some, but not all embodiments of the inventions are shown. Indeed, the invention may be embodied in many different forms and should not be construed as limited to the embodiments set forth herein; rather, these embodiments are provided so that this disclosure will satisfy applicable legal requirements. Like numbers refer to like elements throughout.

Overview

Ultra-Wideband ("UWB") radio technology may be used for real-time tracking of objects. In some example UWB systems, autonomous tags may transmit short packets of digital information utilizing short pulses with very large bandwidth (typically 500 MHz) and, hence, may enjoy fine time resolution (~1 ns), often in the microwave region (typically the C-band). When deployed in an outdoor environment, such as illustrated in FIG. **1**A, these UWB systems, owing to their large bandwidth requirement and strict regulatory constraints on transmitted power, are often very susceptible to interference from transmissions of licensed operators of various types of telecommunications equipment. In some examples, these licensed operators typically have legal priority over the unlicensed (FCC Part 15) operators of a UWB Real Time Locating System ("RTLS"). As a result, deployments in areas near point-to-point telecommunications links or satellite uplinks, for example, are subject to degraded performance due to the high probability that transmissions from these licensed services will occupy some portion of the wide bandwidth used by the UWB RTLS system.

Embodiments of the present invention are directed to methods, systems, apparatuses, and computer readable storage media for providing interference rejection in Ultra-Wideband Real Time Locating Systems. Embodiments of the present invention may provide for mitigation of the interference caused by transmissions from other nearby licensed telecommunications systems or equipment by taking advantage of aspects of the UWB signal relative to a typical interference signal. For example, some embodiments described herein exploit the short bursts of approximately 2 ns in duration of the UWB signal in contrast to the interference signals that are generally of a relatively narrowband nature, occupying a smaller bandwidth than the UWB system, and have a more continuous envelope. Additionally, because interference sources are often located outside the desired area of coverage of the UWB RTLS system, but are of such amplitude that a stray leakage path has sufficient strength to degrade performance of the UWB RTLS system, the difference in location may also be used in some embodiments to provide for mitigation of the interference signal.

The embodiments described herein provide potential solutions for the mitigation of inference signals including processing a received signal through tunable notch filters to mitigate the interference signal and combing two received signals in such a way as to reduce the effects of the interference signal.

Example RF Locating System Architecture

FIG. **1**A illustrates an exemplary radio frequency ("RF") locating system useful for determining the position of an object (e.g., a participant, a football player on a football field, etc.) by determining tag **102** (e.g., an ultra-wideband (UWB) location tag) location information at each receiver **106** (e.g., UWB reader, etc.); a timing reference clock to synchronize the frequency of counters within each receiver **106**; and, in some examples, a reference tag **104**, preferably a UWB transmitter, positioned at known coordinates to enable phase offset between counters to be determined. The systems described herein may be referred to as either "multilateration" or "geolocation" systems; terms which refer to the process of locating a signal source by solving the mathematical intersection of multiple hyperbolae determined by the difference of arrival times between signals received at multiple receivers. Embodiments of the present invention may provide benefits to such a RF locating system (e.g., a UWB RTLS) by providing interference rejection for the system and, thus, providing improved UWB signal reception.

In some examples, the system comprising at least the tags **102** and the receivers **106** is configured to provide two dimensional and/or three dimensional precision localization (e.g., subfoot resolutions), even in the presence of multipath interference, due in part to the use of short nanosecond duration pulses whose time-of-flight can be accurately determined using detection circuitry, such as in the receivers **106**, which can trigger on the leading edge of a received waveform. In some examples, this short pulse characteristic allows necessary data to be conveyed by the system at a higher peak power, but lower overall power levels, than a wireless system configured for high data rate communications, yet still operate within local regulatory requirements which may limit overall power levels.

In some examples, the tags **102** may operate with an instantaneous −3 dB bandwidth of approximately 400 MHz and an average transmission rate below a 187.5 kHz regulatory cutoff. In such examples, the predicted maximum range of the system, operating with a center frequency of 6.55 GHz, is roughly 311 meters. Such a configuration advantageously satisfies constraints applied by regulatory bodies related to peak and average power densities (e.g., effective isotropic radiated power density), while still optimizing system performance related to range and interference. In further examples, tag transmissions with a −3 dB bandwidth of approximately 400 MHz yields, in some examples, an instantaneous pulsewidth of roughly 2.5 nanoseconds that enables a location resolution to better than 30 centimeters.

Referring again to FIG. **1**, the object to be located has an attached tag **102**, preferably a tag having a UWB transmitter, that transmits a burst (e.g., 72 pulses at a 1 Mb/s burst rate), and optionally, a burst comprising an information packet utilizing on-off keying (OOK) that may include, but is not limited to, ID information, a sequential burst count or other desired information for object or personnel identification, inventory control, etc. In some examples, the sequential burst count (e.g., a packet sequence number) from each tag **102** may be advantageously provided in order to permit, at a receiver hub **108**, correlation of TOA measurement data from various receivers **106**.

In some examples, the tag **102** may employ UWB waveforms (e.g., low data rate waveforms) to achieve extremely fine resolution because of their extremely short pulse (i.e., sub-nanosecond to nanosecond, such as a 2 ns (1 ns up and 1 ns down)) durations. As such, the information packet may be of a short length (e.g., 72-112 bits in some example embodiments), that advantageously enables a higher throughput and higher transmission rates. In some examples, higher throughput and/or higher transmission rates may result in larger datasets for filtering to achieve a more accurate location estimate. In some examples, rates of up to approximately 2600 updates per second can be accommodated without exceeding regulatory requirements. Alternatively or additionally, in some examples, the length of the information packets, in conjunction with other system functionality, may also result in a longer battery life (e.g., a 3.0 v 300 mA-hr lithium cell battery may result in a tag battery life in excess of 7 years).

In some examples, one or more other tags, such as a reference tag **104**, may be positioned within and/or about a monitored region, such as monitored region **100** illustrated herein as a football field. In some examples, the reference tag **104** may be configured to transmit a signal that is used to measure the relative phase (e.g., the count of free-running counters) of non-resettable counters within the receivers **106**.

One or more (preferably four or more) receivers **106** are also positioned at predetermined coordinates within and/or around the monitored region **100**. In some examples, the receivers **106** may be connected in a "daisy chain" fashion to advantageously allow for a large number of receivers **106** to be interconnected over a significant monitored region in order to reduce and simplify cabling, reduce latency, provide power, and/or the like. Each of the receivers **106** includes a receiver for receiving transmissions, such as UWB transmissions, and preferably, a packet decoding circuit that extracts a time of arrival (TOA) timing pulse train, transmitter ID, packet number, and/or other information that may have been encoded in the tag transmission signal (e.g., material description, personnel information, etc.) and is configured to sense signals transmitted by the tags **102** and one or more reference tags **104** (if present).

Each receiver **106** includes a time measuring circuit that measures time differences of arrival (TDOA) of tag bursts. The time measuring circuit is phase-locked (e.g., phase differences do not change and therefore respective frequencies are identical) with a common digital reference clock signal distributed via cable connection from a receiver hub **108** having a central timing reference clock generator. The reference clock signal establishes a common timing reference for the receivers **106**. Thus, multiple time measuring circuits of the respective receivers **106** are synchronized in frequency, but not necessarily in phase. While there typically may be a phase offset between any given pair of receivers in the receivers **106**, the offset is readily determined through use of a reference tag **104**. Alternatively or additionally, each receiver may be synchronized wirelessly via virtual synchronization without a dedicated physical timing channel.

In some example embodiments, the receivers **106** are configured to determine various attributes of the received signal. Since measurements are determined at each receiver **106**, in a digital format, rather than analog, signals are transmittable to the receiver hub **108**. Advantageously, because packet data and measurement results can be transferred at high speeds to a receiver memory, the receivers **106** can receive and process tag (and corresponding object) locating signals on a nearly continuous basis. As such, in some examples, the receiver memory allows for a high burst rate of tag events (i.e., information packets) to be captured.

Data cables or wireless transmissions may convey measurement data from the receivers **106** to the receiver hub **108** (e.g., the data cables may enable a transfer speed of 2 Mbps). In some examples, measurement data is transferred to the receiver hub at regular polling intervals.

As such, the receiver hub **108** determines or computes tag position (i.e., object position) by processing TDOA measurements relative to multiple data packets detected by the receivers **106**. In some example embodiments, the receiver hub **108** may be configured to resolve the coordinates of a tag using nonlinear optimization techniques.

In some examples, the system described herein may be referred to as an "over-specified" or "over-determined" system. As such, the receiver hub **108** may then calculate one or more valid (i.e., most correct) positions based on a set of measurements and/or one or more incorrect (i.e., less correct) positions. For example, a position may be calculated that is impossible due the laws of physics (e.g., a tag on a football player that travels more than 100 yards in 1 second) or may be an outlier when compared to other positions. As such one or more algorithms or heuristics may be applied to minimize such error.

One such algorithm for error minimization, which may be referred to as a time error minimization algorithm, may be described as:

$$\varepsilon = \sum_{j=1}^{N} \sum_{k=j+1}^{N} \left\{ (t_j - t_k) - \frac{1}{c} \left[[(x - x_j)^2 + (y - y_j)^2 (z - z_j)^2]^{\frac{1}{2}} - [(x - x_k)^2 + (y - y_k)^2 + (z - z_k)^2]^{\frac{1}{2}} \right] \right\}^2$$

where N is the number of receivers, c is the speed of light, $x_{j,k}$, $y_{j,k}$ and $z_{j,k}$ are the coordinates of the receivers and $t_{j,k}$ are the arrival times received at each of the receivers. Note that only time differences may be evaluated at hub **108** in some example embodiments. The starting point for the minimization may be obtained by first doing an area search on a coarse grid of x, y and z over an area defined by the user and followed by a localized steepest descent search.

Another or second algorithm for error minimization, which may be referred to as a distance error minimization algorithm, may be defined by:

$$\varepsilon = \sum_{j=1}^{N} \left[[(x-x_j)^2 + (y-y_j)^2 + (z-z_j)^2]^{\frac{1}{2}} - c(t_j - t_0) \right]^2$$

where time and position differences are replaced by their non-differential values by incorporating an additional unknown dummy variable, t_0, which represents an absolute time epoch. The starting point for this algorithm is fixed at the geometric mean position of all active receivers. No initial area search is needed, and optimization proceeds through the use of a DavidonFletcher-Powell (DFP) quasi-Newton algorithm in some examples. In other examples, a steepest descent algorithm may be used.

In order to determine the coordinates of a tag (T), in some examples and for calibration purposes, a reference tag (e.g., reference tag **104**) is positioned at a known coordinate position (x_T, y_T, z_T).

In further example embodiments, a number N of receivers $\{R_j: j=1, \ldots, N\}$ (e.g., receivers **106**) are positioned at known coordinates (x_{Rj}, y_{Rj}, z_{Rj}), which are respectively located at distances, such as:

$$d_{Rj}=\sqrt{(x_{Rj}-x_T)^2+(y_{Rj}-y_T)^2+(z_{Rj}-z_T)^2}$$

from a reference tag.

Each receiver R_j utilizes, for example, a synchronous clock signal derived from a common frequency time base, such as clock generator. Because the receivers are not synchronously reset, an unknown, but constant offset O_j exits for each receiver's internal free running counter. The value of the offset O_j is measured in terms of the number of fine resolution count increments (e.g., a number of nanoseconds for a one nanosecond resolution system).

The reference tag is used to calibrate the radio frequency locating system as follows:

The reference tag emits a signal burst at an unknown time τ_R. Upon receiving the signal burst from the reference tag, a count N_{Rj} as measured at receiver R_j is given by:

$$N_{R_j}=\beta\tau_R+O_j+\beta d_{R_j}/c$$

where c is the speed of light and fi is the number of fine resolution count increments per unit time (e.g., one per nanosecond). Similarly, each object tag T_i of each object to be located transmits a signal at an unknown time τ_i to produce a count

$$N_{ij}=\beta\tau_i+O_j+\beta d_{ij}/c$$

at receiver R_j where d_{ij} is the distance between the object tag T_i and the receiver at receiver R_j. Note that τ_i is unknown, but has the same constant value for receivers of all receivers R_j. Based on the equalities expressed above for receivers R_j and R_k and given the reference tag information, differential offsets expressed as differential count values are determined as follows:

$$N_{R_j} - N_{R_k} = (O_j - O_k) + \beta\left(\frac{d_{R_j}}{c} - \frac{d_{R_k}}{c}\right)$$

$$(O_j - O_k) = (N_{R_j} - N_{R_k}) - \beta\left(\frac{d_{R_j}}{c} - \frac{d_{R_k}}{c}\right) = \Delta_{j_k}$$

Δ_{jk} is constant as long as $d_{Rj}-d_{Rk}$ remains constant, (which means the receivers and tag are fixed and there is no multipath situation) and β is the same for each receiver. Note that Δ_{j_k} is a known quantity, since N_{R_j}, N_{R_k}, β, d_{R_j}/c, and d_{R_k}/c are known. That is, the differential offsets between receivers R_j and R_k may be readily determined based on the reference tag transmissions. Thus, again from the above equations, for an object tag (T_i) transmission arriving at receivers R_j and R_k:

$$N_{i_j}-N_{i_k}=(O_j-O_k)+\beta(d_{ij}/c-d_{i_k}/c)=\Delta_{j_k}+\beta(d_{ij}/c-d_{i_k}/c)$$

or,

$$d_{ij}-d_{i_k}=(c/\beta)[N_{i_j}-N_{i_k}-\Delta_{j_k}].$$

The process further includes determining a minimum error value E_i, for each object tag T_i. In one algorithm, this proceeds according to the functional relationship:

$$E_i = \min_{(x,y,z)} \sum_j \sum_{k>j} \left[\left(\frac{c}{\beta}\right)(N_{ij} - N_{ik} - \Delta_{j_k}) - (dist(T_{x,y,z}, R_j) - dist(T_{x,y,z}, R_k)) \right]^2$$

or

$$E_i = \min_{(x,y,z)} \sum_j \sum_{k>j} \left[(d_{ij} - d_{i_k}) - (dist(T_{x,y,z}, R_j) - dist(T_{x,y,z}, R_k)) \right]^2,$$

where

$$dist(T_{x,y,z}, R_j) = \sqrt{(x_{R_j} - x)^2 + (y_{R_j} - y)^2 + (z_{R_j} - z)^2}$$

is the Euclidean distance between point (x, y, z) and the coordinates of the jth receiver R_j. The minimization solution (x', y', z') is the estimated coordinate position for the ith tag. In an example algorithm, this proceeds according to:

$$\varepsilon = \sum_{j=1}^{N} \left[[(x-x_j)^2 + (y-y_j)^2 + (z-z_j)^2]^{\frac{1}{2}} - c(t_j - t_0) \right]^2$$

where each arrival time, t_j, is referenced to a particular receiver (receiver "1") as follows:

$$t_j = \frac{1}{\beta}(N_j - N_1 - \Delta_{j_k})$$

and the minimization is performed over variables (x, y, z, t_0) to reach a solution (x', y', z', t_0').

In some example embodiments, the location of a tag **102** may then be output to a receiver processing and distribution system **110** for further processing of the location data to advantageously provide visualizations, predictive analytics, statistics, and/or the like.

FIG. **1**B illustrates an exemplary receiver in a UWB system comprising a UWB receiver that may be configured in accordance with some embodiments of the present invention. In an

example embodiment, UWB radio data packets **120** are transmitted to the receiver **121** (e.g., receiver **106** of FIG. **1**) and intercepted by UWB antenna **122**. A UWB receiver **123** is provided at each receiver **121**. The UWB receiver can, for example, be designed in accordance with the system described in commonly-owned U.S. Pat. No. 5,901,172, which is incorporated by reference herein in its entirety.

UWB receiver **123** (e.g., receiver **106** of FIG. **1**) produces a digital bit stream that is processed by packet decoding logic **124**, which performs packet framing and bit timing as part of an isochronous communication system. In an isochronous system, the communication signals carry timing information embedded as part of the signal. Upon receiving a complete UWB data packet, packet decoding logic **124** generates and sends an interrupt signal on line **131** to the digital signal processor (DSP) **126**. Tag ID and a sequential burst count **132** are also extracted from the packet, and are sent to the DSP **126** for further processing. Packet decoding logic **124** also generates a TOA timing pulse **133** that is precisely referenced in time relative to the beginning or end of a UWB data packet synchronization preamble. The synchronization preamble may comprise a few bits of data having a unique pattern at the beginning of the UWB packet burst so that the UWB receiver **123** may determine the validity of the received packet as well as bit time alignment. The TOA timing pulse **133** is subsequently measured by measurement apparatus **125**, which functions as a time-to-digital converter. Alternatively, the TOA may be determined as an aggregate or average by measurements of the timing of plurality of pulses. An output TOA measurement **134** is a digital result that is determined in response to receipt of the TOA timing pulse **133**.

Upon receiving an interrupt signal, DSP **126** reads the TOA measurement **134** along with the optional tag ID and sequential burst count **132**, and stores the combined information in the TOA measurement memory **127**. Any additional information decoded by the packet decoding logic **124** (e.g., personnel data, cargo manifest, etc.) can also be stored in memory at this time. In some embodiments, the TOA measurement memory **127** operates as a First-In First-Out (FIFO) buffer. Also, in some embodiments, a program (which is typically stored in a FLASH memory, not shown) manages a portion of a general-purpose static RAM to function as the TOA measurement memory FIFO.

Because packet data and measurement results can be transferred at high speeds to TOA measurement memory **127**, the receiver **121** can receive and process tag (and corresponding object) locating signals on a nearly continuous basis. That is, multiple UWB data packets **120** can be processed in close succession thereby allowing the use of hundreds to thousands of tag transmitters.

In some embodiments, data stored in TOA measurement memory **127** is sent to a receiver hub **108** (of FIG. **1**) over a network interface **128** in response to a specific request from the receiver hub **108**.

In addition, network interface **128** has two bi-directional data links, **135** and **136**. In some embodiments, these data links may be RS422 differential serial links. The network interface **128** may receive command signals from a receiver hub **108** on link **135**. For example, one such command instructs the DSP **126** to transfer the contents of the TOA measurement memory **127** to the receiver hub **108**. Additional commands include those to adjust UWB receiver **123** operating characteristics such as gain and detection thresholds. The network interface **128** may also buffer the data signals between links **135** and **136**. Data link **136** may then connect to the next receiver **121** (e.g., receiver **106** of FIG. **1**) in a communications chain.

Within the receiver **121**, a distributed timing reference clock signal on line **137** may be frequency-multiplied using well-known techniques by phased-lock loop (PLL) clock multiplier **129** thereby producing a local timing reference signal on line **138**. In one embodiment, timing reference clock signal on line **137** may have a clock frequency of 10 MHz, and the local timing reference signal on line **138** may be generated at **100** MHz (i.e., a 10× digital multiplication factor), for example. An advantage of this approach is that the distributed timing reference clock signal can be made low enough in frequency so that it can be transmitted over low-cost cables (e.g., twisted pair wires). Since timing jitter of the local timing reference signal degrades as the PLL multiplier coefficient is increased, there is a necessary trade-off between frequency and jitter of the local timing reference signal and the frequency of the timing reference clock.

Utilizing a common timing reference clock, a plurality of local timing reference signals (one in each receiver) can be precisely matched in frequency. Clock buffer **130** may create a buffered copy of the timing reference clock signal at one receiver to be transmitted to the next receiver in a daisy chain fashion. Using this approach, additional receivers can be connected without concern for clock loading. Buffer delay is also not an issue since the timing reference clock is used for frequency only, and not phase, reference.

In some embodiments, clock signals **137** and **139** may be differential signals. The use of differential clock signals is advantageous since they avoid clock duty cycle distortion which can occur with the transmission of relatively high-speed clocks (e.g., >10 MHz) on long cables (e.g., >100 feet).

Example Receivers Providing Interference Rejection

FIG. **2** illustrates a block diagram of a first exemplary UWB receiver (e.g., receiver **106** of FIG. **1**) providing interference rejection in accordance with some embodiments of the present invention. The UWB receiver of FIG. **2**, which may be embodied by receiver **106**, receiver **121**, or the like, may comprise antenna **201**, low noise amplifier (LNA) **202**, bandpass filter **203**, mixer **204**, notch filter **205**, mixer **206**, bandpass filter **207**, amplifier **208**, detector **209**, bias amplifier **210**, splitter **211**, voltage controlled oscillator (VCO) **212**, controller **213**, and baseband amplifier **214**.

In this embodiment, antenna **201** may receive both the desired UWB signal and an undesired interference signal (e.g. some component of an interferer's originally transmitted signal). For example, an interferer may transmit a signal comprising a first component of the signal that may be received by antenna **201** and a second component of the signal that is directed toward the interferer's intended receiver. In some examples, the low noise amplifier (LNA) **202** may add a predetermined gain and may further improve system noise performance. The bandpass filter **203** may be configured to cover the UWB band, for example with a bandwidth of 500 MHz and a center frequency of 6.55 GHz.

The mixer **204**, notch filter **205**, mixer **206**, splitter **211**, and voltage controlled oscillator (VCO) **212** of FIG. **2** together may form a tunable notch filter. The nominal frequency of VCO **212** may be above the UWB band of interest, so as to enable mixer **204** to perform a downconversion to a lower frequency band where notch filter **205** will be easier or more cost-effective to construct for a given bandwidth and level of stop-band rejection. For example, some embodiments may use some frequency in the L-band. Mixer **206** then upconverts the notched signal, for example back into the C-band (e.g., 4.0 to 8.0 GHz) or other predetermined band,

which enables bandpass filter **207**, amplifier **208**, detector **209**, and baseband amplifier **214** to process the filtered UWB signal.

In some example embodiments, the tunable notch filter is configured to notch out (i.e., attenuate, remove, etc.) only the minimal amount of the received signal bandwidth that is necessary for interference rejection. As such, the width of notch filter **205** may be chosen to be no larger than the widest bandwidth interference signal that is expected. In typical installations of a UWB locating system, such as the locating system described with reference to FIG. **1**A, the width of the notch filter need not be larger than 30 MHz at its greatest depth, corresponding to the widest bandwidth allowed for commercial services in the 5.925-7.25 GHz range by Federal Communications Commission (FCC) regulations. The amount of bandwidth that a notch filter removes from the UWB signal depends on the bandwidth of the notch filter and will necessarily be greater than the width of the notch at its greatest rejection. For example, in an exemplary 400 MHz UWB implementation, a 30 MHz notch filter with 40 dB of rejection may actually have a −3 dB bandwidth of 90 MHz, and remove 22.5% of the signal bandwidth, which will reduce the UWB signal by around 40% or approximately a 2.2 dB reduction in received signal strength. For this reason, it is desirable to use the narrowest possible notch bandwidth needed to mitigate the interference.

Detector **209** provides a DC or slowly varying output that is taken to the bias amplifier **210**. Bias amplifier **210** is of a type that has a low internal offset, such that small, relatively slow, changes in the operating point of detector **209** can be measured by controller **213**. Controller **213** may monitor the output of detector **209** and adjust the specific frequency of VCO **212** so as to minimize the magnitude of the slow changes in detector **209**, including its DC value. For example, the controller **213** may determine whether the output of detector **209** is above a threshold level and adjust the frequency of VCO **212** based on this determination. When this detected output (e.g., the magnitude of slow changes) from detector **209** is minimal, then maximum filtering of the interference signal may be achieved.

For example, the amount that an interference signal must be suppressed is based on the signal strength of the interference signal, which in turn depends on the gain and pattern of the antenna and the direction from which the interference signals arrive. In an exemplary 400 Mhz UWB system implementation, the minimum signal strength that provides good performance may be about −70 dBm, with signal reception dropping off at about −73 dBm. To not have a significant impact on UWB performance, an interferer must be attenuated to about 15 dB below the minimum signal strength. For example, in an exemplary 400 MHz UWB system implementation, the interferer could be attenuated to −88 dBm for effective mitigation.

FIG. **3** illustrates a block diagram of another exemplary UWB receiver in accordance with some embodiments of the present invention. FIG. **3** illustrates a modification to the tunable notch filter interference rejection illustrated in the UWB receiver of FIG. **2** providing an alternate-path interference detection operation. The receiver of FIG. **3**, which may be embodied by receiver **106**, receiver **121**, or the like, may comprise antenna **301**, LNA **302**, bandpass filter **303**, splitter **304**, mixer **305**, notch filter **306**, mixer **307**, bandpass filter **308**, amplifier **309**, detector **310**, baseband amplifier **311**, splitter **312**, mixer **313**, splitter **314**, narrowband bandpass filter **315**, amplifier **316**, detector **317**, VCO **318**, and controller **319**.

In the example embodiment of FIG. **3**, antenna **301**, LNA **302**, and bandpass filter **303** may be configured to receive the desired UWB signal along with an interference signal (i.e., a component of an interference signal), such as was described with respect to FIG. **2**. Splitter **304** then diverts this composite signal (comprising the desired UWB signal and an interference signal) into two paths, with both paths receiving the same composite signal as input.

In the upper path **320**, mixer **305**, notch filter **306**, mixer **307**, splitter **312**, and VCO **318** form a tunable notch filter as described with respect to FIG. **2**. Bandpass filter **308** covers the UWB band, and amplifier **309**, detector **310**, and baseband amplifier **311** are configured to process the filtered UWB signals.

The lower path **330**, comprising mixer **313**, narrowband bandpass filter **315**, amplifier **316**, and detector **317**, forms a superheterodyne receiver tuned to the same frequency as the notch filter **306**. In some examples, by tuning the superheterodyne receiver to the same frequency as the tunable notch filter **306** greater sensitivity to detection of narrowband interferers can be obtained.

Controller **319** monitors the level of interference at detector **317** and controller **319** may then adjust the specific frequency of VCO **318** to mitigate additional interference in the received signal. In one embodiment, the controller **319** determines whether the level of interference is above a threshold level and then adjusts the specific frequency of VCO **318**. Splitter **314** provides the output of VCO **318** to both the tunable notch filter of the upper path **320** and to the superheterodyne receiver of the lower path **330** such that the tunable notch filter and the superheterodyne receiver are tuned to the same frequency. When the detected output from detector **317** is minimal (e.g., a minimal magnitude of slow changes at the detector), then maximum filtering of the interference signal may be achieved. An advantage of this embodiment is the increased sensitivity provided by an independent signal path with narrower bandwidth and, hence, higher allowable gain than would be possible with a shared signal path.

FIG. **4** illustrates a block diagram of another exemplary UWB receiver in accordance with some embodiments of the present invention and illustrates a similar embodiment to that of FIG. **3** in which the superheterodyne receiver of the lower path **330** of FIG. **3** is replaced by a chopper-stabilized amplifier in the lower path **440** of FIG. **4**. The receiver of FIG. **4**, which may be embodied by receiver **106**, receiver **121**, or the like, may comprise antenna **401**, LNA **402**, bandpass filter **403**, splitter **404**, mixer **405**, notch filter **406**, splitter **407**, mixer **408**, bandpass filter **409**, amplifier **410**, detector **411**, baseband amplifier **412**, controller **413**, VCO **414**, mixer **415**, squarewave source **416**, bandpass filter **417**, amplifier **418**, detector **419**, and chopper **420**.

In the example embodiment of FIG. **4**, antenna **401**, LNA **402**, and bandpass filter **403** may be configured to receive the desired UWB signal along with an interference signal (i.e., a component of an interference signal), similar to the operations described with respect to FIG. **2**. In this embodiment however, splitter **404** diverts this composite signal (comprising the desired UWB signal and the interference signal) into two paths, with both paths receiving the same composite signal as input.

In the upper path **430**, mixer **405**, notch filter **406**, mixer **408**, splitter **407**, and VCO **414** form a tunable notch filter as described with respect to FIG. **2**. Bandpass filter **409** covers the UWB band, and amplifier **410**, detector **411**, and baseband amplifier **412** process the filtered UWB signals.

The lower path **440** forms a chopper-stabilized amplifier comprising mixer **415**, square wave source **416**, bandpass

filter **417**, amplifier **418**, detector **419**, AC coupled amplifier **421**, chopper **420**, and low-pass filter **422**. In this approach, bandpass filter **417** can accept the entire UWB band, while good sensitivity of the interference signal can be obtained without being affected by DC offset shifts in the various components, due to AC coupling throughout.

Controller **413** monitors the level of interference at detector **419** and controller **413** may then adjust the specific frequency of VCO **414** to mitigate additional interference in the received signal. In one embodiment, the controller **413** determines whether the level of interference is above a threshold level and then adjusts the specific frequency of VCO **414**. When the detected output from detector **419** is minimal, then maximum rejection of the interference signal may be achieved.

FIG. **5** illustrates a block diagram of another exemplary UWB receiver in accordance with some embodiments of the present invention. FIG. **5** illustrates an example embodiment of a receiver, which may be configured to use directional receive antennas to focus the system reception area on a particular region so as to mitigate interference that may originate outside that particular region.

For example, in an open air stadium such as the football stadium of FIG. **1**A, a plurality of tags **102** may be attached to objects (i.e., football players, the football, field markers, etc.). Such tags **102** would thus move about the monitored region (i.e., the playing field) while broadcasting their respective signals. An interference source (not shown in FIG. **1**A) such as a telecommunications tower positioned outside the stadium may broadcast interference signals proximate to or through the monitored region.

Returning to FIG. **5**, the interference source **505** may transmit focused beams that substantially bypass the stadium except for stray signals (or components thereof) that are refracted into the stadium and thus interfere with the UWB system coverage area of the monitored region. In this example embodiment, the receiver may comprise a directional receive antenna **501** that can be used to detect one or more tags **102** on the field of the stadium (e.g., monitored region **100**). The directional receive antenna **501** may have a beam pattern which is substantially more directed toward the desired tag signals (e.g., UWB system coverage region or monitored region **100**) and less directed toward the stray signals from interference source **505**.

A second sampling antenna **502** can be oriented or otherwise directed away from the UWB system coverage region (e.g., desired tags **102**/monitored region **100**), and oriented or otherwise directed more toward interference source **505**. In some embodiments, the two signal paths (from antenna **501** and antenna **502**) can be combined in such a way as to reduce the undesired effects of the interference source **505**.

The example receiver of FIG. **5** may comprise directional receive antenna **501**, sampling antenna **502**, LNA **506**, bandpass filter **507**, combiner **508**, variable phase shifter **509**, variable attenuator **510**, bandpass filter **511**, amplifier **512**, detector **513**, baseband amplifier **514**, controller **515**, and bias amplifier **516**.

In the example receiver of FIG. **5**, the desired UWB signals, along with a first component of an interference signal, may be received by directional receive antenna **501**, LNA **506**, and bandpass filter **507**, similarly to the operation described with respect to FIG. **2**. The composite signal (comprising the desired UWB signal and the first component of the interference signal) then passes through combiner **508** and onto the remaining stages of a conventional UWB receiver (e.g., receiver **106**), comprising bandpass filter **511**, RF amplifier **512**, detector **513**, and baseband amplifier **514**, similarly to the operations described with respect to FIG. **2**.

Sampling antenna **502** may also receive a signal comprising the second component of the interference signal and the UWB signal but in different proportion than the receive antenna **501**. The sampling antenna **502** may receive a signal in which the ratio of the signal strength of the interference signal to that of the UWB signal is substantially greater than the corresponding ratio for the receive antenna **501**. The presence of combiner **508** allows a signal from sampling antenna **502** to be summed in opposition to the composite signal from directional receive antenna **501**. Since the ratio of signal strengths of the interference and UWB signals differ in the two paths from antennas **501** and **502**, a combination of the two signal paths is enabled which provides substantially more cancellation to the interference signal than to the UWB signal at the output of combiner **508**.

Variable attenuator **510** and variable phase shifter **509** are under control of controller **515** which, as before, monitors the level of interference at detector **513** passed through bias amplifier **516**. Adjustments, in some example embodiments, may then be made by controller **515** (e.g., when the interference level is above a threshold level) so as to minimize the DC or slowly varying components of the signal at detector **513** so as to mitigate the interference.

Additionally or alternatively, in some embodiments, the receiver of FIG. **5** may also be modified to use alternate-path interference detection schemes such as described with respect to FIGS. **3** and **4**.

FIG. **6** illustrates a flowchart of an exemplary process for interference rejection in a UWB location system in accordance with some embodiments of the present invention. The process may start at **602**, where the receiver antenna receives a composite signal containing both the desired UWB signal and components of an interference signal. The composite signal may be passed through a LNA and bandpass filter to a tunable notch filter which may comprise a first mixer, a notch filter, a second mixer, a splitter, and a VCO, such as illustrated in FIGS. **2** through **4**.

At **604**, the composite signal may be passed through the tunable notch filter to filter out an amount of the received signal bandwidth (e.g., attenuate a particular frequency band) to provide rejection of the interference signal. The filtered signal may then pass through a bandpass filter, amplifier, detector, and baseband amplifier for processing of the filtered UWB signal at **606**.

At **608**, a controller monitors the level of interference at the detector, such as by monitoring the DC or slowly varying components of the signal at the detector, as described in regard to FIGS. **2** through **4** above. At **610**, the controller may determine whether the signal, monitored at the detector, contains more than a threshold amount of interference. If so, the controller may adjust the specific frequency of the VCO to adjust the tunable notch filter and improve the interference filtering at **612**. Operation may then return to **602** to continue receiving the composite signal.

FIG. **7** illustrates a flowchart of another exemplary process for interference rejection in a UWB location system in accordance with some embodiments of the present invention. The process may start at **702**, where a first antenna (e.g., directional receive antenna **501** of FIG. **5**) may receive a first composite signal containing both the desired UWB signal and first component of an interference signal. At **704**, a second antenna (e.g., sampling antenna **501** of FIG. **5**) may receive a second signal (e.g., comprising a higher signal strength second component of the interference signal). At **706**, the first composite signal may be passed through a LNA and bandpass

filter to a combiner (e.g., combiner **508** of FIG. **5**). At **708**, the second signal may also be passed to the combiner, such as through a variable attenuator and a variable phase shifter as illustrated in FIG. **5**.

At **710**, the first composite signal and the second signal may be combined in such a way as to reduce the effects of the interference signal in the output signal. For example, the combiner may sum the second signal in opposition to the first composite signal to provide a combination signal which provides substantially more cancellation to the interference signal than to the UWB signal. The combined (or output) signal may then pass through a bandpass filter, amplifier, detector, and baseband amplifier for processing of the filtered UWB signal at **712**.

At **714**, the controller may monitor the level of interference at the detector, such as by monitoring the DC or slowly varying components of the signal at the detector, as described with respect to FIG. **5** above. At **716**, the controller may determine whether the signal monitored at the detector contains more than a threshold amount of interference. If so, at **718**, the controller may adjust the variable attenuator and/or the variable phase shifter to modify the second signal before it is input to the combiner so as to improve the interference filtering. Operation may then return to **702** to continue receiving the first composite signal.

In some embodiments, certain ones of the operations above may be modified or further amplified as described below. Moreover, in some embodiments additional optional operations may also be included. It should be appreciated that each of the modifications, optional additions or amplifications below may be included with the operations above either alone or in combination with any others among the features described herein.

Many modifications and other embodiments of the inventions set forth herein will come to mind to one skilled in the art to which these inventions pertain having the benefit of the teachings presented in the foregoing descriptions and the associated drawings. Therefore, it is to be understood that the inventions are not to be limited to the specific embodiments disclosed and that modifications and other embodiments are intended to be included within the scope of the appended claims. Moreover, although the foregoing descriptions and the associated drawings describe example embodiments in the context of certain example combinations of elements and/or functions, it should be appreciated that different combinations of elements and/or functions may be provided by alternative embodiments without departing from the scope of the appended claims. In this regard, for example, different combinations of elements and/or functions than those explicitly described above are also contemplated as may be set forth in some of the appended claims. Although specific terms are employed herein, they are used in a generic and descriptive sense only and not for purposes of limitation.

That which is claimed:

1. An ultra-wideband (UWB) receiver comprising:

a first antenna configured to receive a first signal, the first signal comprising a UWB signal and a first component of an interference signal;

a second antenna configured to receive a second signal, the second signal comprising at least a second component of the interference signal; and

a combiner configured to:

receive the first signal from the first antenna;

receive the second signal from the second antenna; and

combine the first signal and the second signal to generate an output signal providing cancellation of at least part of the first component of the inference signal based at least in part on the second component of the interference signal;

a detector configured to:

receive the output signal of the combiner; and

indicate an interference level associated with the output signal;

a controller configured to:

monitor the interference level associated with the output signal; and

adjust at least one of a variable attenuator and a variable phase shifter in an instance in which the monitored interference level is above a threshold level,

the variable attenuator and the variable phase shifter configured to:

modify the second signal received from the second antenna; and

provide the modified second signal to the combiner;

the controller further configured to:

determine a first ratio of a signal strength of the interference signal to a ultra-wideband signal received by the second antenna; and

cause the interference signal and the ultra-wideband signal received by the second antenna to be summed in opposition to the first signal in an instance in which the first ratio is greater than a second ratio of a signal strength of the interference signal to a ultra-wideband signal received by the first antenna; and

the combiner further configured to:

combine the first signal with the summed interference signal and the ultra-wideband signal to enable cancellation of the interference signal.

2. The UWB receiver of claim **1** wherein the first antenna is positioned in a first direction to receive signals transmitted from a monitored region and the second antenna is positioned in a second direction, different from the first direction, to receive signals transmitted from outside the monitored region.

3. The UWB receiver of claim **1** wherein the first component of the interference signal and the second component of the interference signal are generated by one or more communications systems positioned outside of a monitored region.

4. The UWB receiver of claim **1** further comprising:

a superheterodyne receiver, the superheterodyne receiver comprising a narrowband bandpass filter and a detector, the superheterodyne receiver is configured to detect whether at least the second component of the interference signal exceeds the threshold level.

5. The UWB receiver of claim **1** further comprising:

a low noise amplifier; and

a bandpass filter;

the low noise amplifier configured to:

add a predetermined gain to the first signal; and

provide the added gain first signal to the bandpass filter;

the bandpass filter configured to:

filter the added gain first signal to pass frequencies in a UWB frequency band comprising the UWB signal and attenuate frequencies outside the UWB frequency band; and

provide the filtered first signal to the combiner.

6. A method comprising:

receiving a first signal from a first antenna, the first signal comprising a UWB signal and a first component of an interference signal;

receiving a second signal from a second antenna, the second signal comprising at least a second component of the interference signal;

combining, at a combiner, the first signal and the second signal to generate an output signal providing cancellation of at least part of the first component of the inference signal based at least in part on the second component of the interference signal;

determining, by a controller, a first ratio of a signal strength of the interference signal of the second signal to a ultra-wideband signal of the second signal;

causing the interference signal and the ultra-wideband signal of the second signal to be summed in opposition to the first signal in an instance in which the first ratio is greater than a second ratio of a signal strength of the interference signal of the first signal to the ultra-wideband signal of the first signal; and

combining, at the combiner, the first signal with the summed interference signal and the ultra-wideband signal of the second signal to enable cancellation of the interference signal.

7. The method of claim **6** further comprising:

modifying, by a variable attenuator and a variable phase shifter, the second signal received from the second antenna; and

providing the modified second signal to the combiner for combining with the first signal.

8. The method of claim **7** further comprising:

receiving, at a detector, the output signal of the combiner, and

generating an indication of an interference level associated with the output signal;

monitoring, by a controller, the interference level associated with the output signal; and

adjusting, by the controller, at least one of a variable attenuator and a variable phase shifter in an instance in which the monitored interference level is above a threshold level.

9. The method of claim **8** further comprising detecting, via a superheterodyne receiver, whether at least the second component of the interference signal exceeds the threshold level.

10. The method of claim **6** wherein the first antenna is positioned in a first direction to receive signals transmitted from a monitored region and the second antenna is positioned in a second direction, different from the first direction, to receive signals transmitted from outside the monitored region.

11. The method of claim **6** wherein the first component of the interference signal and the second component of the interference signal are generated by one or more communications systems positioned outside of a monitored region.

12. The method of claim **6** further comprising:

adding a predetermined gain to the first signal;

filtering the added gain first signal to pass frequencies in a UWB frequency band comprising the UWB signal and attenuating frequencies outside the UWB frequency band; and

providing the filtered first signal to the combiner.

13. An ultra-wideband (UWB) system comprising:

one or more UWB transmitters, each configured to transmit a UWB signal; and

one or more UWB receivers, the one or more UWB receivers comprising:

a first antenna configured to receive a first signal, the first signal comprising the UWB signal and a first component of an interference signal;

a second antenna configured to receive a second signal, the second signal comprising at least a second component of the interference signal;

a combiner configured to:

receive the first signal from the first antenna;

receive the second signal from the second antenna; and

combine the first signal and the second signal to generate an output signal providing cancellation of at least part of the first component of the inference signal based at least in part on the second component of the interference signal;

a detector configured to:

receive the output signal of the combiner; and

indicate an interference level associated with the output signal;

a controller configured to:

monitor the interference level associated with the output signal; and

adjust at least one of a variable attenuator and a variable phase shifter in an instance in which the monitored interference level is above a threshold level;

the variable attenuator and the variable phase shifter configured to:

modify the second signal received from the second antenna; and

provide the modified second signal to the combiner

the controller further configured to:

determine a first ratio of a signal strength of the interference signal to a ultra-wideband signal received by the second antenna; and

cause the interference signal and the ultra-wideband signal received by the second antenna to be summed in opposition to the first signal in an instance in which the first ratio is greater than a second ratio of a signal strength of the interference signal to a ultra-wideband signal received by the first antenna; and

the combiner further configured to:

combine the first signal with the summed interference signal and the ultra-wideband signal to enable cancellation of the interference signal.

14. The UWB system of claim **13** wherein the first antenna is positioned in a first direction to receive signals transmitted from a monitored region and the second antenna is positioned in a second direction, different from the first direction, to receive signals transmitted from outside the monitored region.

15. The UWB system of claim **13** wherein the first component of the interference signal and the second component of the interference signal are generated by one or more communications systems positioned outside of a monitored region.

16. The UWB system of claim **13** wherein the one or more UWB receivers further comprise a superheterodyne receiver, the superheterodyne receiver comprising a narrowband bandpass filter and a detector, the superheterodyne receiver is configured to detect whether at least the second component of the interference signal exceeds the threshold value.

* * * * *